Main material and f nish: Pocked black powder coated ZDC handle and housing, ZDC prof le insert,white zinc-plated steel cam and rod
Application: 90 degree handle rotation combines with rod latch to open or close
Remark: Default prof le insert TC01, default key K140

Default cam: S1A35Y00001(Rod latch type)
S1B45Y07002(Cam type)

Performance parameter:
Handle load tension capability: ¢235N
Handle load torque capability: ¢40N.m
Maximum static load: 270N(cam type)

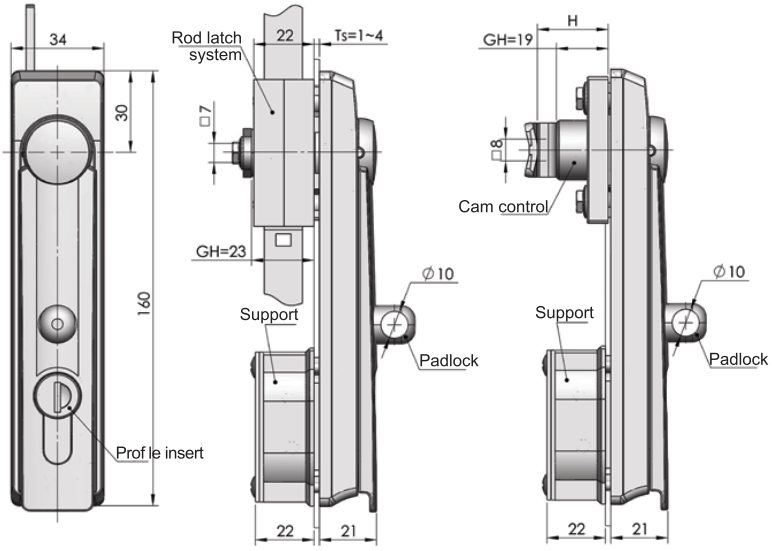

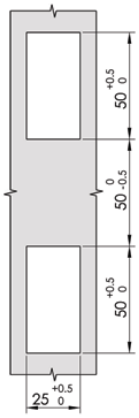

Cut out

Optional accessories:
See cam latch system Mb9 series on P174
Rod latch system Mb0 series on P175
TC01/TC02/TC03 prof le insert on P027

Remark: PA housing or ZDC housing ,default ZDC housing

Speci fcation	Model	ERP
Optional rod latch system Mb01	MS846-1	MS846Z1B140001
Optional rod latch system Mb01, padlockable	MS846-1-P	MS846Z1B140002
Optional rod latch system Mb02	MS846-1-2	MS846Z1B140005
Optional rod latch system Mb02, padlockable	MS846-1-2P	MS846Z1B140007
Cam latch system	MS846-2	MS846Z1B140003
Cam latch system, padlockable	MS846-2-P	MS846Z1B140004