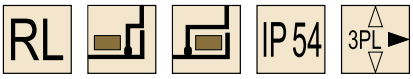

Main material and f nish: Pocked black powder coated ZDC handle, housing and button, ZDC dust-proof cap, white zinc-plated steel cam and rod
Application: Quick-open, easy assembling, 90 degree handle rotation combines with rod latch to open or close
Remark: Default key K030

Default cam: S1A35Y00001(Rod latch type)
S1B45Y07002(Cam type)

Performance parameter:
Handle load tension capability: ¢295N
Handle load torque capability: ¢25N.m
Maximum static load: 270N(cam type)

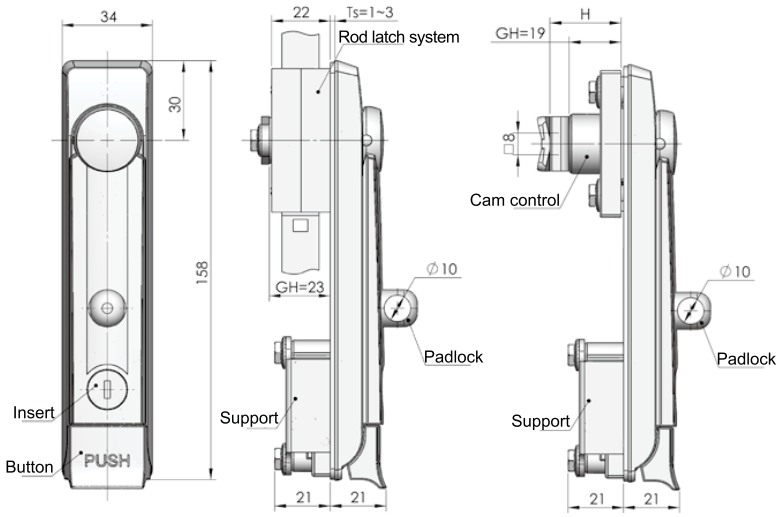

MS832 MS833

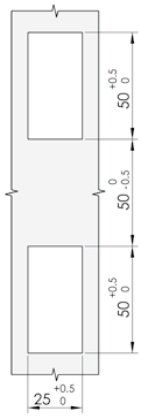

Cut out

Optional Accessories:
See cam latch system Mb9 series on P174
Rod latch system Mb0 series on P175

Specif cation	Model	ERP
With button,optional rod latch system Mb01	MS832-1	MS832Z1B030001
With button, optional rod latch system Mb01, padlockable	MS832-1P	MS832Z1B030002
With button,optional rod latch system Mb02	MS832-1-2	MS832Z1B030015
With button, optional rod latch system Mb02, padlockable	MS832-1-2P	MS832Z1B030014
Without button, optional rod latch system Mb01	MS832-2	MS832Z1B030005
Without button, optional rod latch system Mb01, padlockable	MS832-2P	MS832Z1B030006
Without button, optional rod latch system Mb02	MS832-2-2	MS832Z1B030015
Without button, optional rod latch system Mb02, padlockable	MS832-2-2P	MS832Z1B030016
With button	MS833	MS833Z1B030001
With button, padlockable	MS833-1P	MS833Z1B030016
Without button	MS833-2	MS833Z1B030003
Without button, padlockable	MS833-2P	MS833Z1B030018