MS708

Tighten

Main material and f nish: Sand-blast ZDC housing, handle and button, zinc-plated steel screw
Application: Quick-open design, easy installation. Adjusting screw on cam meets the need of distance control

Performance parameter:
Handle load tension capability: ¢285N
Maximum static load: 200N

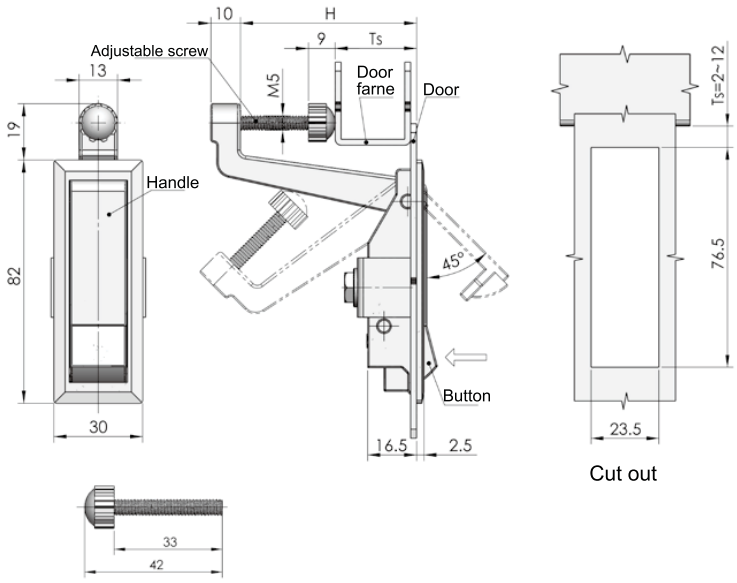

Remark: Default adjustable screw, others on request

Specification	Model	ERP
H=46.5	MS708-1	MS708Z3H000002
H=59.5	MS708-2	MS708Z3H000004
H=24	MS708-3	MS708Z3H000006

MS710

RL

Main material and f nish: Nanometer painted ZDC housing and handle, ZDC insert, white zinc-plated steel support and cam
Application: Quick-open , easy assembling. One-point locking or three-point locking function will be achieved with different cam mounted on
Remark: Default key k010
Default cam: S3C62Y00004
Performance parameter:
Handle load tension capability: ¢ 220N
Handle load torque capability: ¢ 11 N.m
Maximum static load: 380 N

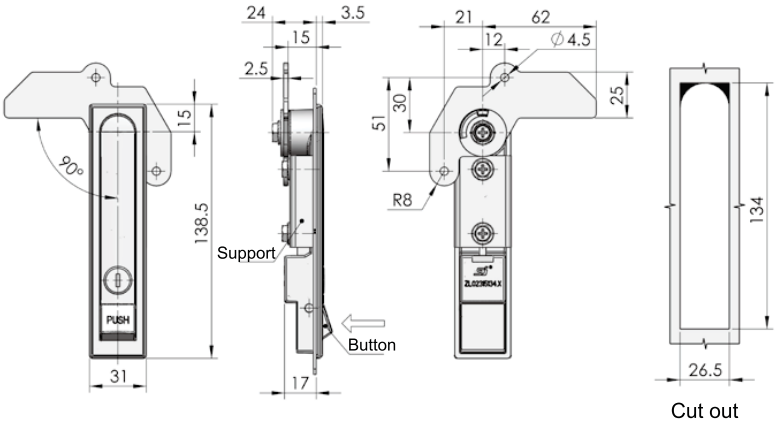

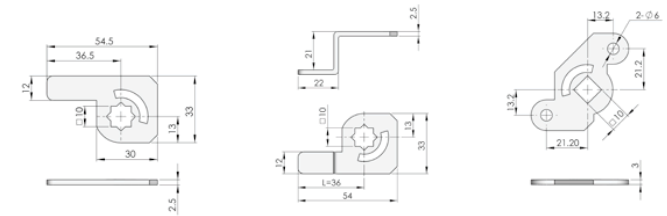

Optional cam S1C3700D Optional cam S1C3621D Optional cam S2C2100

Remark : Optional cam refer to drawings separately

ERP	MS710Z2B010002

Remark: The default cam is S3C6200